B1	12 VDC .
B2	24 VDC .
B3	24 VAC 50/60Hz
B4	110 VAC 50/60Hz
B5	230 VAC 50/60Hz
B6	

C1	Pe 0..10 bar 1 W
C2	Pe 0..10 bar 2 W
C3	Pe 0..10 bar 2 VA
C4	
C5	
C6	

Serigraphy									
Order Number	Nominal Size (Ø mm)	Type	manual override			Combination B + C		CE Label	Data Sheet
			without	push	turn				
R422002728	0.8	NC		X		B2	C1	no	
R422002729	0.8	NC			X	B2	C1	no	
R422002730	1.1	NC		X		B2	C2	no	
R422002731	1.1	NC			X	B2	C2	no	
R422002732	1.1	NC		X		B1	C2	no	
R422002733	1.1	NC			X	B1	C2	no	
R422002734	1.1	NC		X		B3	C3	no	
R422002735	1.1	NC			X	B3	C3	no	
R422002736	1.1	NC		X		B4	C3	yes	
R422002737	1.1	NC			X	B4	C3	yes	
R422002738	1.1	NC		X		B5	C3	yes	
R422002739	1.1	NC			X	B5	C3	yes	

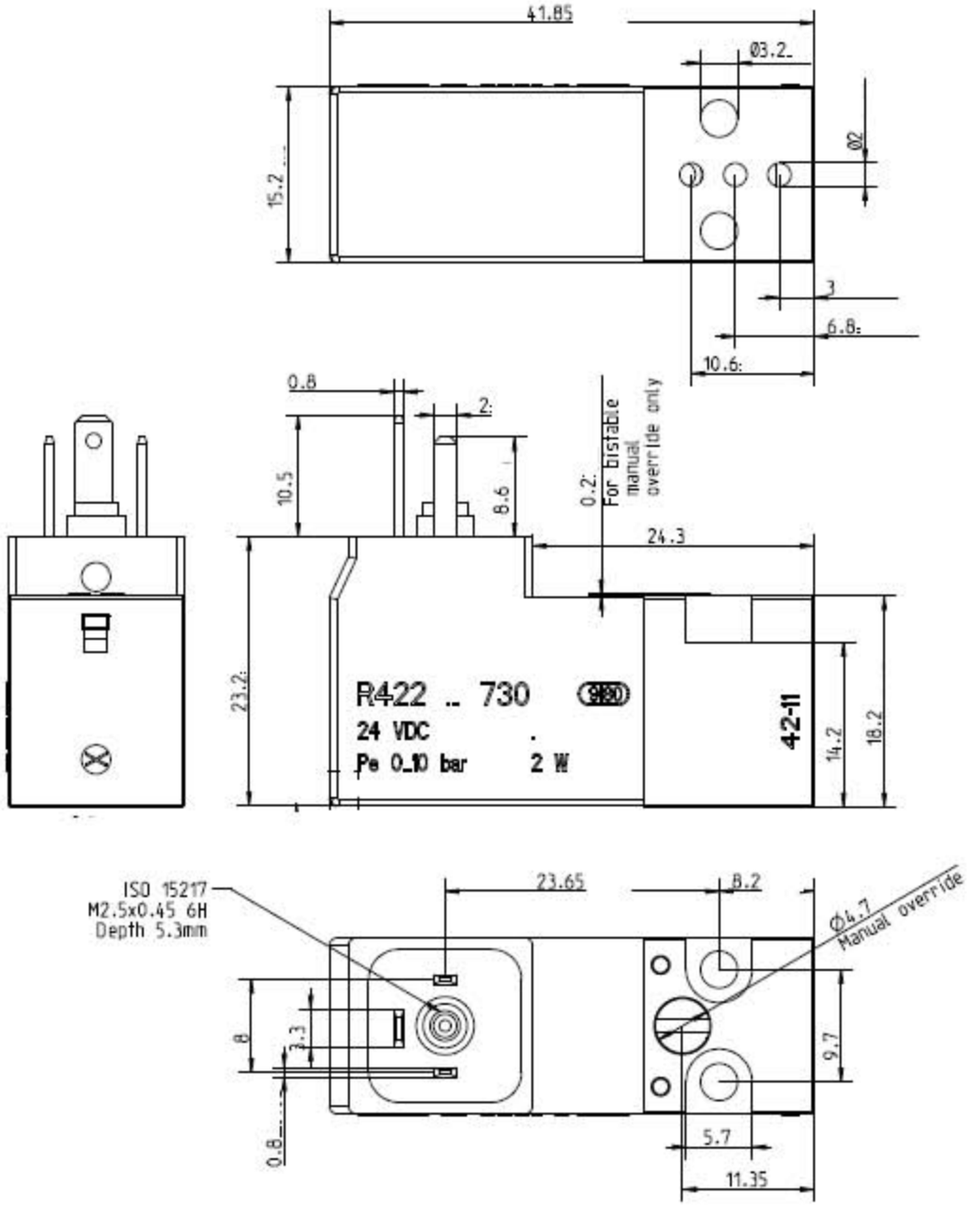

All linear dimensions in/ TOUTES COTES LINEAIRES EN

AC	505000000595	20111130	SW02BNV		JC02BNV	7130	DCP/PAS222
AA	INITIAL	20110927	SW02BNV			7130	DCP/PAS222
Ind.	Change/MOD.	YYYYMMDD	Drawn/DESS.	Checked/CONT.	Releas./VAL.	BWN	Resp. dept./DEPT. RESP.

Add. info./INFO. SUPPL.

Lang./LG. EN/FR | Wght./POIDS | Crit. P. -- | Scale/ECH. | MAR --

Rexroth Bosch Group

PILOT VALVE
DISTRIBUTEUR PILOT

Sheet/PL. 1/1

Mat.assets/M.VOIR N 2580-1 | Syst. PE | Doc.type MTA | R422002730-ZUZ | DP/DP 001 | Ing. AC | Format A2

Repl. for | Repl. by